CONTROLLED ACCESS, INC.
Turnstiles and ADA Gates

6500 Series Control Head

Service & Installation Manual

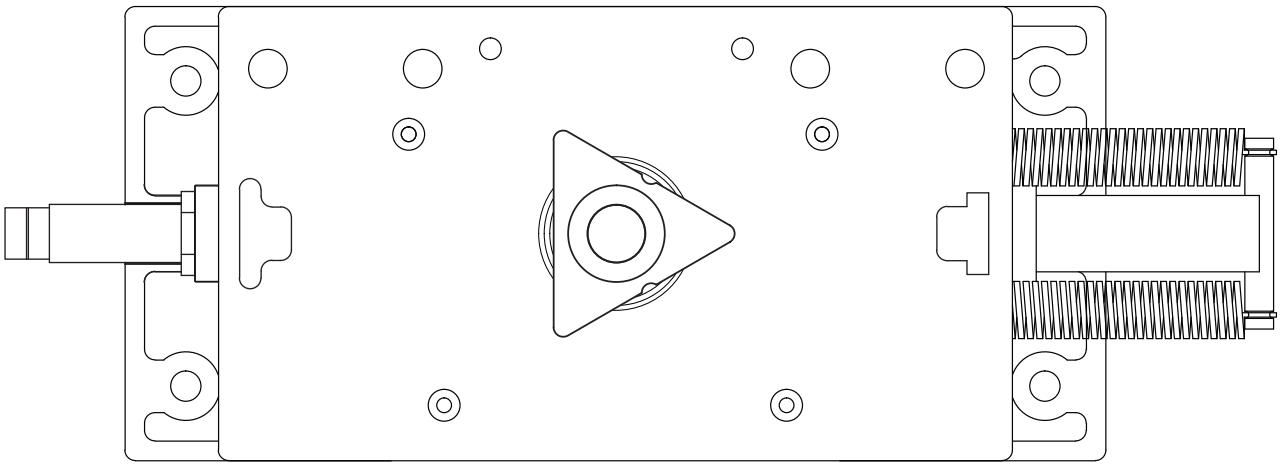

Note: Successful turnstile installation depends on reading this manual.

Please keep this service manual after installation. If an installation is done by a construction company or outside installer, please pass this book along to the end user. This book is required for maintainence, troubleshooting & repairs.

Service Manual: 0740 E Gen. 3

Important Electrical Information

Installation of the control head mechanism into the turnstile requires a grounding-type outlet receptacle installed inside of the frame or cabinet through the provided conduit access points.

To reduce the risk of electric shock, this equipment has a grounding type plug that has a third (grounding) pin. This plug will only fit into a grounding type outlet. If the plug does not fit into the outlet, contact a qualified electrician to install the proper outlet. Do not change this plug in any way.

Additionally, the P24-60W power supply from this appliance must be grounded to the frame of the turnstile. Utilize the green colored grounding screw threaded into the grounding tab located near the power supply along with the provided grounding wire from the power supply to ensure the equipment is properly grounded.

Do not connect to a receptacle controlled by a switch.

UL 294 Classification Declarations:

Feature	**Level**
Destructive Attack Test	I
Line Security	I
Endurance	IV
Standby Power	I

ULC S319, Class 1

Wiring methods shall be in accordance with:
National Electrical Code, ANSI/NFPA 70
Canadian Electrical Code, CSA C22.1, Part I, Safety Standard for Electrical Installations

The 6500 Series Control Head is suitable for indoor & outdoor use, within in an appropriate turnstile or gate model.

Table of Contents

Important Electrical Information	2
Control Head Installation	4
Full Height Rotor Alignment	5
Mechanical Overview	6
Internal Parts Breakdown	7
Parts List	8
Control Head Configurations	9
Locking Bar Information	10
Hydraulic Shock & Indexing	12
Electrical Introduction	13
Wiring Diagram	14
Wiring Legend	15
Logic Controller Settings	16
Testing Procedure	17
Limit Switch & Limit Switch Cam Information	18
Maintenance & Cleaning	19
Troubleshooting	20
Proper Turnstile Usage	23
Warranty	24
Appendix	

6500 Series Control Head Installation

To reduce the risk of electrical shock, do NOT hard wire the power supply directly into input voltage. Only power this turnstile from a grounding-type receptacle. Should the turnstile be installed without a grounding-type receptacle, contact a qualified electrician to install one for you.

Waist High Installation:

New waist high turnstiles already have the 6500 Series Control Head mounted in place.

Should the need to replace the control head arise, follow these steps:

- Remove the arm assembly from the turnstile by unbolting the 3x 5/16-18 button head cap screws.
- Remove the lid from the cabinet. Some models have a lock and key system while others are secured with 10/24 button head cap screws located on the sides.
- Unplug the control head from the grounded receptacle located inside of the cabinet.
- Unbolt the 4x 5/16-18 carriage bolts holding the control head assembly in place.
- Pull the control head out of the cabinet and disconnect any access control inputs from the control board.
- Place the new control head on top of the cabinet and connect the access control inputs to the new control board (see wiring diagram).
- Insert the control head into the cabinet with the locking bars facing upwards towards you and bolt it into place with the 4x 5/16-18 carriage bolts.
- Ground the new power supply to the cabinet utilizing the provided grounding tab located near the control head.
- Plug in the control head to the grounded outlet receptacle.
- Install arm assembly onto arm adapter with the 3x 5/16-18 button head cap screws.
- Test functionality of turnstile. Adjust hydraulic shock as needed.
- Reinstall lid.

Full Height Installation:

- Remove the cover from the mainframe by removing the 10/24 truss head screws.
- If applicable, remove the existing control head from the mainframe:
    - Unplug the existing control head from the grounded outlet receptacle.
    - Unbolt the 4x 3/8-16 carriage bolts holding the head in the main channel.
    - Disconnect access control inputs from the existing control board.
    - Pull the control head assembly straight up. The shaft will also come out after about 4".
- Install the control head into the hex insert on the rotor so that the rotor is properly aligned with one set of arms in between the two yokes **(see rotor alignment information)**.
- Bolt the control head into the main channel with the 4x 3/8-16 carriage bolts.
- Connect access control inputs to new control board (see wiring diagram).
- Ground the power supply to the frame utilizing the provided grounding tab located near the control head.
- Plug the control head into a grounded outlet receptacle.
- Test functionality of turnstile. Adjust hydraulic shock as needed.
- Replace the cover of the mainframe using the 10/24 truss head screws.

Single Full Height Turnstile Rotor Alignment

Mounting a new 6500 Series Control Head is very simple. Unbolt the existing control head from whatever turnstile it is installed in and mount the new one in its place. The 6500 Series Control Head is backwards compatible with nearly every turnstile we have ever made on it's own. In units that the hole pattern does not match, an adapter plate is provided to make installation just as simple.

Installing a 6500 Series Control Head into a full height turnstile requires a little extra attention to detail when installing. The rotor itself needs to be properly aligned within the passage way before installing the control head or it will not function as intended. One set of arms on the rotor of the unit needs to be pointing in the center of the two half-moon yoke assemblies, not meshed together with the stationary barrier's arms. See diagram below.

Correct Alignment

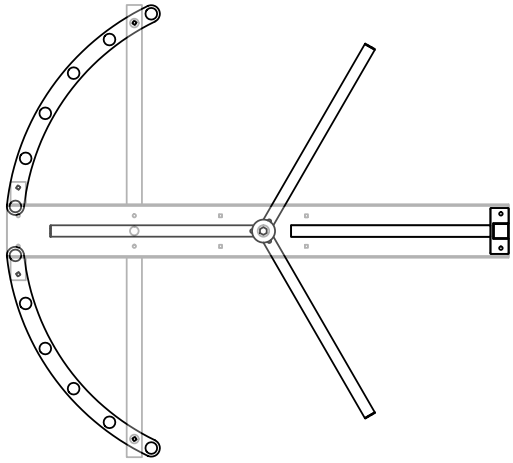

Rotor has one set of arms in between two half-moon yokes in home position. Arms are not meshed with stationary arms on the barrier.

Incorrect Alignment

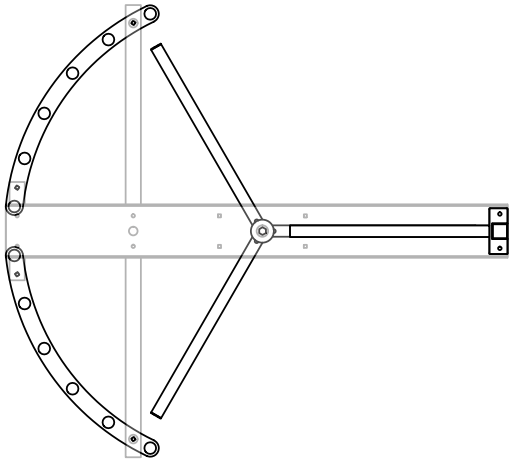

Rotor should **NOT** have one set of arms meshed with stationary arms on barrier with the other two sets of arms pointing to the outsides of the half-moon yokes.

Note: Failure to properly align the rotor can cause inconsistent operation and the **possibility to become trapped within the turnstile** in some scenarios. If the rotor was installed incorrectly, the solution is to fix the rotor alignment. Do not adjust access control or logic controller settings to accommodate the improper alignment.

Simply remove the four carriage bolts holding the 6500 Series Control Head to the mainframe, pull up on the control head to remove it as one assembly, spin the rotor to the correct position, then reinstall the control head into the mainframe.

6500 Series Control Head Mechanical Information

All of our turnstiles and ADA gates operate with a mechanism called the 6500 Series Control Head. This sturdy and easy to maintain drive for the turnstile has replaced all previous model control heads. It is adaptable to nearly any existing turnstile and comes with each new turnstile purchase. This control head can be configured in multiple ways to accommodate the security requirements of each individual job site.

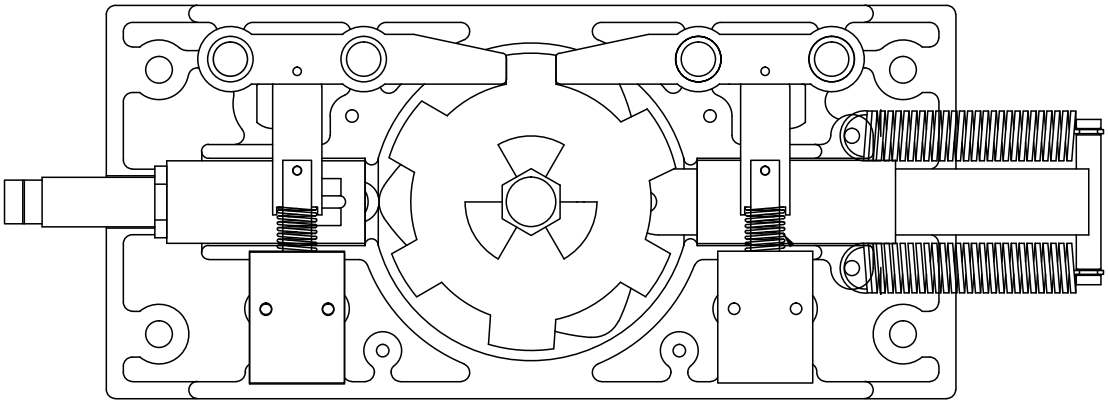

An internal view of an electronically controlled two way 6500 series control head.

While the head can be configured for mechanical (no electronics) operation, a turnstile's security potential is reached in the case of an electronic two way control head. In this instance, each rotational direction is independently unlocked. Configured properly, a control head will allow for one rotation per valid entry request. Our anti-backup cams are designed so that it is mechanically impossible to become trapped within the turnstile when properly installed.

Each control head comes preconfigured to your specific needs based off of a directional sheet that is filled out before shipment. The heads are delivered pre-wired, tested and adjusted to our factory recommendations. Installation is simple: connect inputs from access control devices into the logic controller and plug the unit's power supply into a 100-240 VAC (single phase) receptacle. The power supply will automatically set itself to function on your local voltage and convert it to 24VDC.

TOP CASTING REMOVED

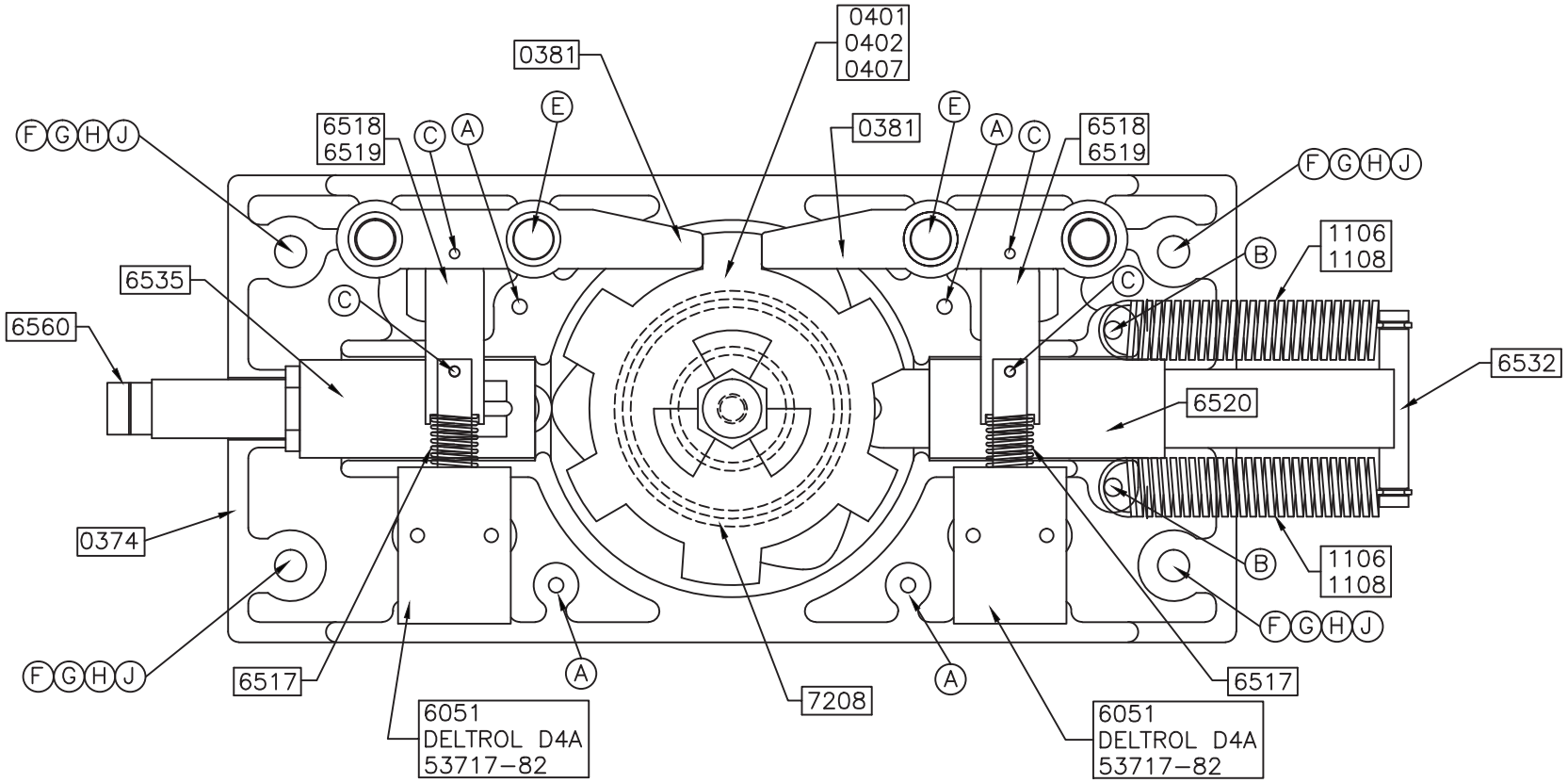

ALL ELECTRICAL COMPONENTS UL CERTIFIED

NOTE:
ALL WIRE AWG 18 GAUGE 300 VAC
UL 1007/1569

CONTROLLED ACCESS, INC.
Turnstiles and ADA Gates

SYM	QTY	DESCRIPTION
Ⓐ	4	1/4–20 x 1" SOCKET HEAD
Ⓑ	2	1/4"ø x 1 1/4" SPRING PIN
Ⓒ	4	1/8"ø x 5/8" SPRING PIN
Ⓔ	2	1/2"ø X 2 1/4" DOWEL PIN

WAIST HIGH UNITS		
Ⓕ	4	5/16 x 1–1/2" SS CARRIAGE BOLT
Ⓖ	4	5/16 SS FLAT WASHER
Ⓗ	4	5/16 SS LOCK WASHER
Ⓙ	4	5/16 SS HEX NUT

FULL HEIGHT UNITS		
Ⓕ	4	3/8" x 1–1/2" SS CARRIAGE BOLT
Ⓖ	4	3/8 SS FLAT WASHER
Ⓗ	4	3/8 SS LOCK WASHER
Ⓙ	4	3/8 SS HEX NUT

6500 SERIES CONTROL HEAD BOTTOM ASSEMBLY

CONTROLLED ACCESS, INC.
Turnstiles and ADA Gates

Controlled Access, Inc.
1636 W. 130th St.
Brunswick, OH 44212

Phone: (800)942-0839
Fax: (800) 942-0828
Web: www.controlledaccess.com
Email: sales@controlledaccess.com

Complete control heads are available upon request. Contact us for pricing details.

Control Head Castings

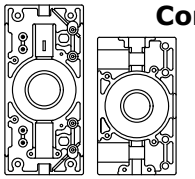

0373 - Bottom Casting
$199.23

0372 - Top Casting
$199.23

Locking Bar Assemblies

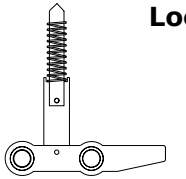

0382 - Fail Open Assembly
$82.47

0383 - Fail Lock Assembly
$82.47

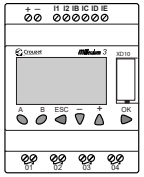

0740 - Logic Controller (XD10)
$255.18

Shock Housing Assemblies

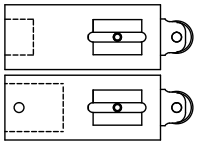

6535 - WH/427/430/T80/ADA
$171.59

6541 - 439/448/P60/HD
$180.21

Hydraulic Shock Absorbers

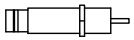

6560 - WH/427/430/T80/ADA
$173.02

6561 - 439/448/P60/HD
$250.92

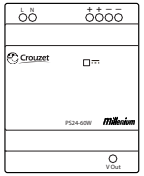

0750 - 24VDC Power Supply (60 W) w/ NEMA 5-15 Drop Cord
$166.76

0381 - Locking Bar Casting w/ Oil Impregnated Bushings
$39.69

Locking Bar Linkages

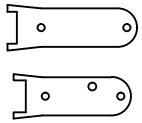

6519 - Fail Open
$11.12

6518 - Fail Lock
$11.12

Solenoid Springs

6510 - Fail Open Spring
$8.18

6016 - Fail Lock Spring
$8.18

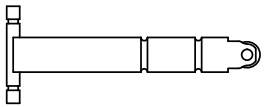

6532 - Index Pin
$120.35

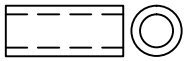

6520 - Index Pin Tubing
$29.92

Indexing Springs

1106 - Waist High (Light) $5.91

1108 - Full Height (Heavy) $5.91

1107 - ADA (Extra Heavy) $5.91

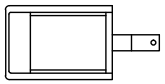

6051 - Solenoid
Deltrol D4A53717-82
$60.36

Limit Switches

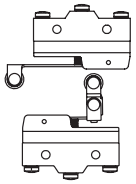

2180 - Standard
(Z-15GW2-B7-K) $20.57

1700 - One Way
(BZ2RW825-A2) $49.90

Limit Switch Cams

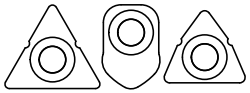

2267 - Standard $27.81

2268 - ADA $27.81

2269 - One-Way $27.81

Control Head Bearings

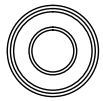

7208 - Bottom Casting (6007RSNR)
$5.57

1641 - 1” ID for HD Top Castings & All Pre-2018 Tops (1641-2RSNR)
$6.71

1640 - 7/8” ID for Standard Duty Top Castings (1640-2RSNR)
$5.35

Cam Assemblies

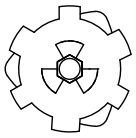

0401 - 427/430/T80/WH (7/8 Hex)
$240.02

0407 - 439/448/P60/HD (1.25" Hex)
$264.81

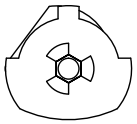

0402 - ADA (Must specify model)
$211.12

Proximity Sensor & Accessories

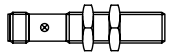

7211 - 24VDC PNP Prox. Sensor w/ M12 Connector (Sick 1040763)
$82.62

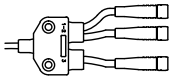

0766 - 3 Branch M12 Splitter
$135.08

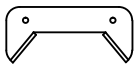

6589 - Turnstile Prox. Bracket w/ 3x Mounts - LH, RH & Home
$10.80

Prices are subject to change without notice. Parts orders are shipped via UPS. Shipping costs are not included. All parts orders under a $500 require credit card payment. Date: 2/7/2019

6500 Series Control Head Configurations

The 6500 Series Control Head can be configured in a number of different ways. All units operating with the 6500 Series Control Head self-center with a spring driven indexing pin and hydraulically shock to the home position to prevent damage or injury.

Various configurations are available to suit the needs of any environment. These include:

Manual both ways: Unit rotates freely in both directions. This unsecured configuration is used as a means to direct traffic through one area. Full height turnstiles can be also be purchased with an out of service lockout bar which would allow the end user to lock the turnstile with a standard pad lock.

Manual one way: Turnstile rotates in one direction but not the other. This is often used for egress only areas.

Electronic one way with free exit: Unit rotates freely in one direction but requires some form of access control in the other. This is a typical installation in many facilities that want to control who is entering but want egress to be free flowing.

Electronic one way with no exit: Turnstile is locked in both directions at all times, but in one direction can be unlocked with access control. Typically, this would be installed in scenarios where there is an alternate means of exiting the facility.

Electronic two way: Turnstile requires access control for both entering and exiting a facility. This configuration offers the highest level of security and also flexibility for installations.

Fail lock: Upon power failure, an electronically controlled direction would remain locked. This offers a high level of security but typically is not a good idea for egress unless alternate methods of exiting are available. Unless equipped with key overrides, this is can be easily converted to fail open by ordering alternate parts. This is also known as fail secure.

Fail open: Upon power failure, an electronically controlled direction would remain open. This is the most common configuration as it allows for secure access controlled passage in normal situations but in power outages it free wheels. Unless equipped with key overrides, this can be easily converted to fail lock by ordering alternate parts. This is also known as fail safe.

Key overrides: This option is available on either electronic or manual two way models. It can allow for a quick reconfiguration of free flowing passage or locking in either direction. The key override option is not intended for constant every day use. Should you require an additional lock-down feature on your turnstile, a better option (on a full height turnstile) is an out of service lockout with a standard pad lock. Note that the key override option makes conversion between fail lock and fail open very difficult to accomplish and also may not be available for some turnstile or gate models.

6500 Series Control Head Locking Bar Information

The 6500 Series Control Head is built to order based on a direction set up sheet sent with each quote. This sheet defines how each direction of passage functions.

Direction 1 is defined as clockwise rotation on a full height or with the cabinet on the right for waist high. Direction 2 is defined as counter-clockwise rotation on a full height or with the cabinet on the left for waist high.

Possible configurations include: no passage, free passage (manual), fail lock and fail open. Fail lock and fail open are not field reversible without additional components.

"No passage" directions include a fail lock locking bar assembly as well as an unwired solenoid. This adds the appropriate parts to the control head to prevent it from rotating in that direction.

"Free passage" (or manual) directions remove the solenoid and locking bar assembly, allowing the cam to spin freely.

Each direction has a pair of holes on the locking bar and control head casting. These holes act as pivot points for the locking bar casting. The inner holes are fail lock and outer holes are fail open. A .5" dowel pin slides through the entire assembly to hold everything in place.

Alternate linkages and springs are needed to convert a direction's power failure status.

If optional key overrides are included, it becomes much more difficult to re-arrange the configuration. Typically it is best to send the control head into the factory to reconfigure any key override equipped head to ensure everything is done correctly.

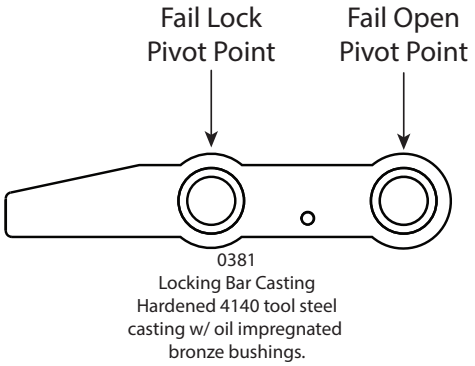

0381
Locking Bar Casting
Hardened 4140 tool steel
casting w/ oil impregnated
bronze bushings.

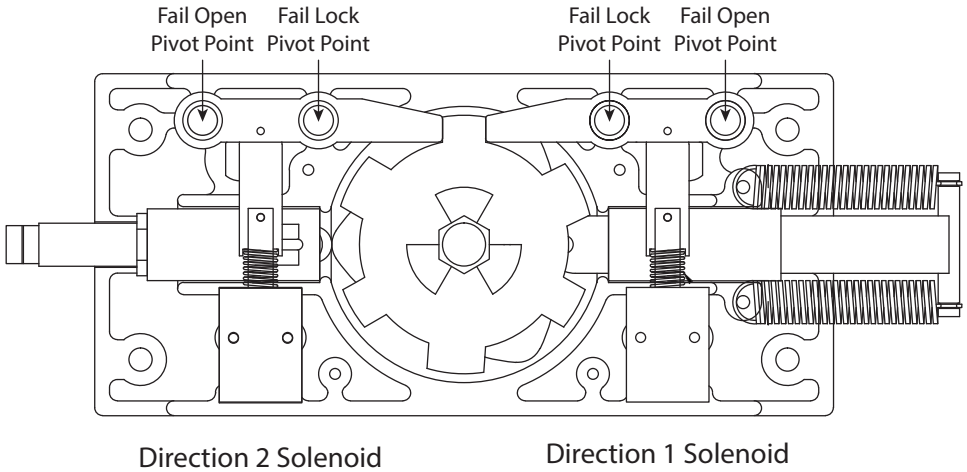

6500 Series Control Head Locking Bar Information (Continued)

The 6500 Series Control Head can be reconfigured from fail lock to fail open and vice versa. Extra components are required to do so.

If a control head has key overrides, we suggest sending it in for factory reconfiguration.

Locking bar assemblies are held together with 1/8" spring pins. Extracting these pins and reinstalling them can be tricky, so for convenience we also offer entire locking bar assemblies.

Replacing an entire locking bar assembly is simple; punch the .5" dowel pin from the pivot point through the head casting (via a small hole in the bottom casting for this purpose), pull out the old locking bar assembly and replace it with the new one.

If changing from fail lock to fail open or vice versa, install the dowel pin in the alternate hole.

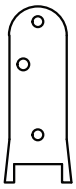

6518
Fail Lock Linkage
These have an approximate length of 2.25" and also include an extra hole the key override option.

6010
Fail Lock Solenoid Spring
These look the same as the fail open, but are actually lighter in force
Wire diameter is .032".
This spring was also used on the 6100 Series Control Head.

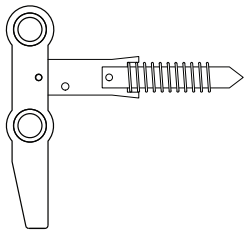

0383
Fail Lock Locking Bar Assembly
Includes locking bar casting w/ oil impregnated bushings, solenoid spring, locking bar linkage, and solenoid plunger.

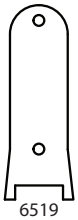

6519
Fail Open Linkage
These have an approximate length of 2.5" and do not have the extra hole for the key override option.

6510
Fail Open Solenoid Spring
These look similar to fail lock, but are actually stronger in force.
Wire diameter is .041".

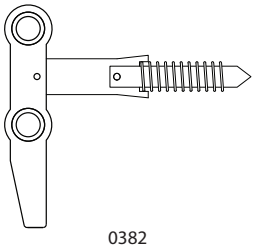

0382
Fail Open Locking Bar Assembly
Includes locking bar casting w/ oil impregnated bushings, solenoid spring, locking bar linkage, and solenoid plunger.

Make sure the solenoid spring is between the alignment tabs on the linkage or the assembly may bind when pivoting.

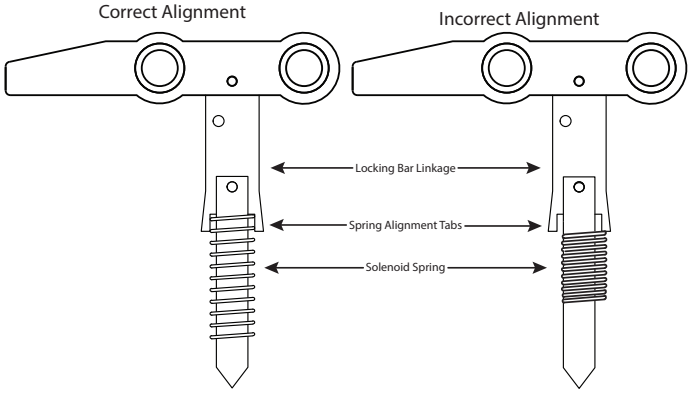

6500 Series Control Head Hydraulic Shock Information

The 6500 Series Control Head utilizes a spring loaded index pin for auto-centering the cam while a hydraulic shock offers counter resistance to slow the rotation down.

Set properly, the shock will allow a turnstile or gate to self-center while rotating smoothly without slamming.

Some turnstile models use a different shock than others. Waist highs and smaller full heights use a .75" diameter shock while larger full heights use a 1" diameter shock.

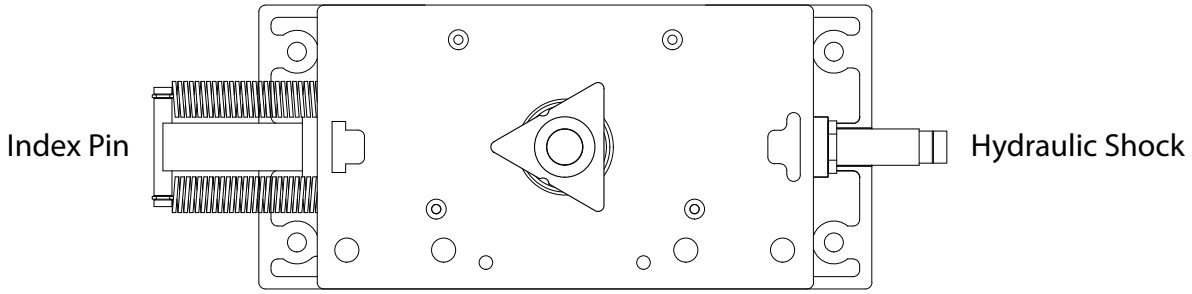

3/4" Hydraulic Shocks:

Setting:
Loosen the set screw on the head of the dial and turn the knob. The dial can be set between 0 and 8. The higher the number, the stronger the shock is. Tightening the set screw can alter the shock strength so a good habit is to loosen the set screw, turn the dial, tighten the set screw then test your setting. Repeat until satisfied.

Replacement:
Thread the new shock into the shock housing as far as it will turn while the cam is in the home position. Once it bottoms out, thread the shock back out 1.5 - 2 turns until the numbers on the dial are facing upright. Some models may require an additional turn or two outward if the arm does not self center on even the lowest setting.

1" Hydraulic Shocks:

Setting:
Loosen the set screw on the head of the dial and turn the knob. The dial can be set between 0 and 8. The higher the number, the stronger the shock is. Tightening the set screw can alter the shock strength so a good habit is to loosen the set screw, turn the dial, tighten the set screw then test your setting. Repeat until satisfied.

Replacement:
Thread the new shock into the housing as far as it will turn while the cam is in the home position. Once it bottoms out, thread the shock back out 1.5-2 turns until the set screw pointer is facing upright. Fasten the shock into the housing by snugging the 1/4-28 set screw into the bronze housing (snugly, but do not over tighten or the brass might start to tare).

Failure to turn the shock back out after threading it in all of the way will likely cause the part to wear out very quickly.

6500 Series Control Head Electrical Information

Each electronic control head comes with a power supply, a programmable logic controller (PLC), limit switches (or optionally, proximity sensors) and solenoids. For safety purposes, it is recommended that you read all literature on the electrical components before attempting to install the control head into a turnstile.

The 6500 Series Control Head is on the third generation of electronic components. The new XD10 logic controller is a direct replacement of both the 0789 control board and 6789 (Keyence KV-16DR) logic controller.

The latest enhancements provide a broader temperature range for outdoor installations (-4 to 131F) as well as a user friendly text based interface with a daylight visible display. With this also comes some new features such as on board testing buttons, turnstile statistics / information, etc.

While the wiring may be different, there are very few exceptions to when this board is compatible with installed products. If an installation has the old 0789 circuit board (PCB) and has the optional proximity sensor upgrade, new proximity sensors will need to be purchased. This is because the 0789 board had NPN inputs while the XD10 (and the KV-16DR) have PNP inputs.

The new PLC still requires relay contact closures for inputs just like all previous generations, so any installation is compatible in one way or another. If assistance is needed with understanding how to convert the wiring from access control to the new logic controller, please view this manual or call our technical support department for assistance.

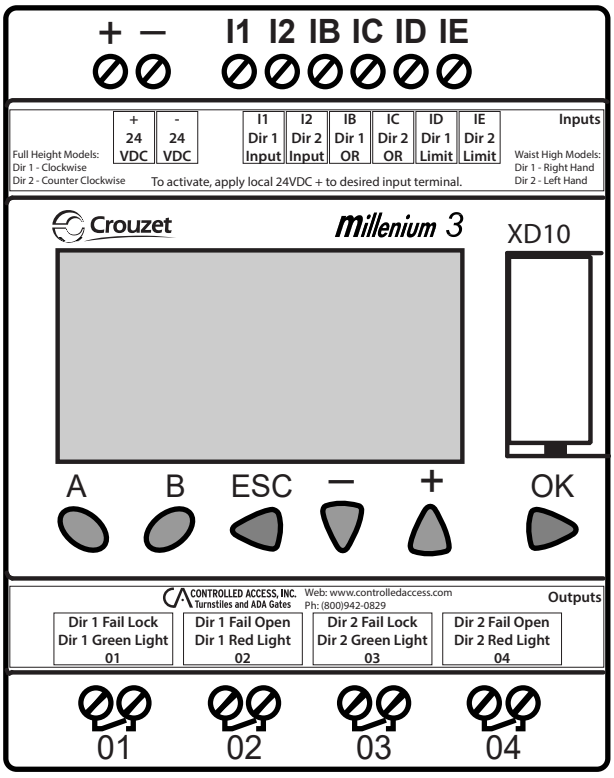

XD10 Logic Controller
0740

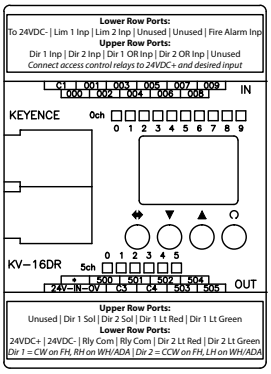

KV-16DR Logic Controller
6789

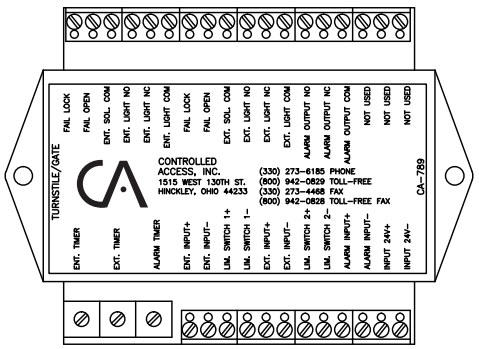

Control Board
0789

6500 Series Control Head w/ XD10 Controller Standard Wiring Diagram

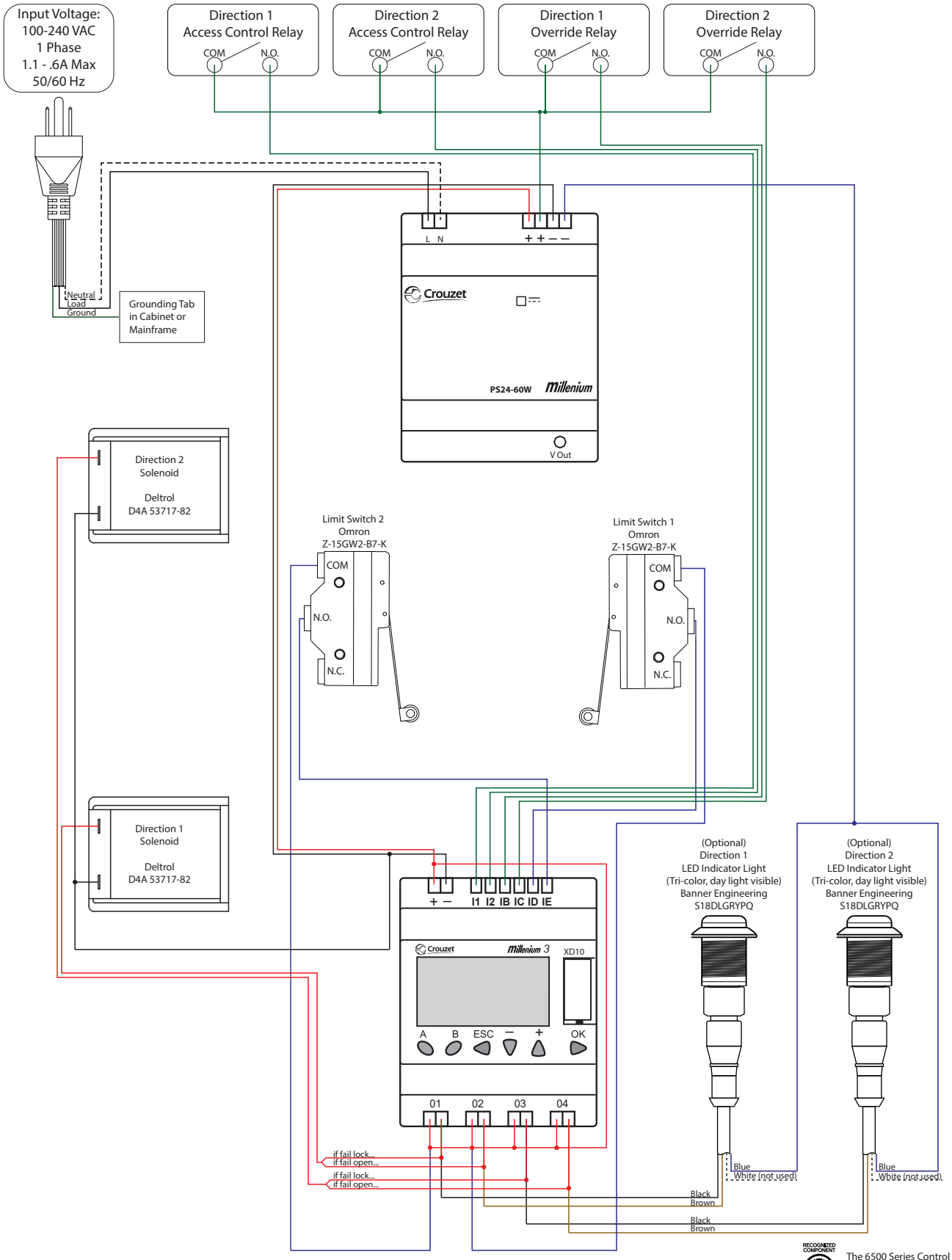

CONTROLLED ACCESS, INC.
Turnstiles and ADA Gates

1/8/2018

RECOGNIZED COMPONENT
Intertek
4008027

The 6500 Series Control Head is certified to conform to the following standards: UL 294, UL 325, UL Subject 2593, CAN/ULC S319 & CSA C22.2 #247

6500 Series Control Head w/ XD10 Controller Standard Wiring Legend

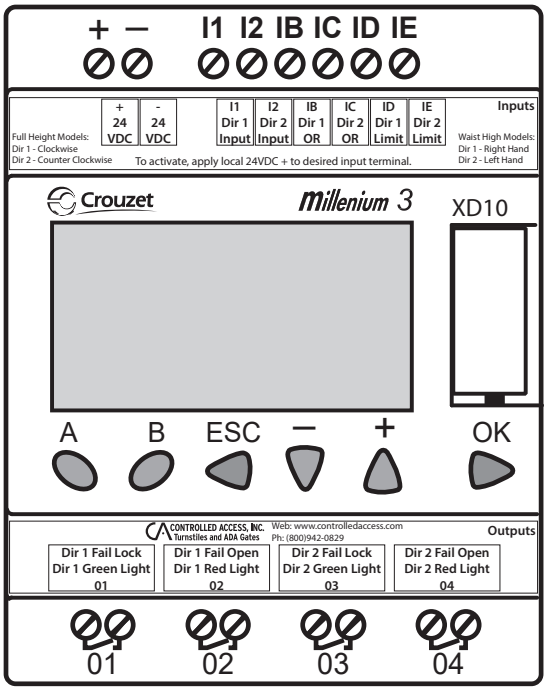

General definitions:

Direction 1 - Clockwise on full height turnstiles or cabinet on right for waist high turnstiles & ADA gates.
Direction 2 - Counter clockwise on full height turnstiles or cabinet on left for waist high turnstiles & ADA gates.
Limit - A switch or sensor designed to detect rotation and lock the unit after a rotation.
Fail Lock - Upon power failure, the direction is designed to remain locked.
Also known as Fail Secure.
Fail Open - Upon power failure, the direction is designed to remain opened.
Also known as Fail Safe.

Each unit is built to order, preconfigured to function as specified at the time the order is placed. Some or all of the information listed may not be relevant to the installation.

Inputs are triggered with local 24VDC + (also known as PNP or sourcing).
Connect relay output from access control device to turnstile by terminating 24VDC + to relay common and the desired input to the relay's normally open terminal.

Be sure to disconnect power before wiring the board for safety.

Note: directional status outputs (lights) are unaffected by optional key overrides as the override occurs outside of the logic controller.

Input descriptions:

24VDC + Positive output from the 24VDC power supply connects here.
24VDC - Negative output from the 24VDC power supply connects here.

I1 - Direction 1 Input - Unlocks direction 1 for either one rotation or until the timer expires. Standard access control should terminate here.
I2 - Direction 2 Input - Unlocks direction 2 for either one rotation or until the timer expires. Standard access control should terminate here.

IB - Direction 1 Override - Holds direction 1 unlocked for duration of contact closure. Mainly for fire alarms and other temporary overrides.
IC - Direction 2 Override - Holds direction 2 unlocked for duration of contact closure. Mainly for fire alarms and other temporary overrides.

ID - Limit 1 Input - Cancels Direction 1 activation if triggered before timer expires, re-locking the unit after one rotation.
IE - Limit 2 Input - Cancels Direction 2 activation if triggered before timer expires, re-locking the unit after one rotation.

Output descriptions:

All 4 relay outputs have individual commons. 24VDC+ is distributed to each relay common to operate the turnstile. It is OK to add extra wires to these relay commons to distribute voltage to other devices.

01 - Output 1 - Dual purpose output for Direction 1. If the direction is fail lock, it's solenoid would connect here. If equipped with an indicator light, the green leg would connect here. Output switches from OFF to ON when directional input is triggered.

02 - Output 2 - Dual purpose output for Direction 1. If the direction is fail open, it's solenoid would connect here. If equipped with an indicator light, the red leg would connect here. Output switches from ON to OFF when directional input is triggered.

03 - Output 3 - Dual purpose output for Direction 2. If the direction is fail lock, it's solenoid would connect here. If equipped with an indicator light, the green leg would connect here. Output switches from OFF to ON when directional input is triggered.

04 - Output 4 - Dual purpose output for Direction 2. If the direction is fail open, it's solenoid would connect here. If equipped with an indicator light, the red leg would connect here. Output switches from ON to OFF when directional input is triggered.

Indicator light information:

Green Light - An indicator to inform pedestrians that they are allowed to pass through the unit. Uses black output wire from light's cable.
Red Light - An indicator to inform pedestrians that the unit is locked or that pedestrians require credentials to enter. Uses brown output wire from light's cable.
As a side note, indicator lights purchased from Controlled Access, Inc. can also be wired to glow ***yellow***. If desired, this can be used instead of red with the unused white wire on the light's cable to indicate to pedestrians they require credentials to enter. This is especially handy for multi-lane installations in which some directions are "no passage" instead of "controlled passage". Likewise, green lights can also be wired to a red light output to constantly glow green to indicate "free passage".

6500 Series Control Head w/ XD10 Controller Standard Turnstile Settings

The XD10 logic controller on the 6500 Series Control Head has a text based menu screen to adjust settings and view statistics of the turnstile. Pressing the A button will cycle to each of the screens available on the device. Pressing B from any screen listed will return to the Home Screen.

Home Screen

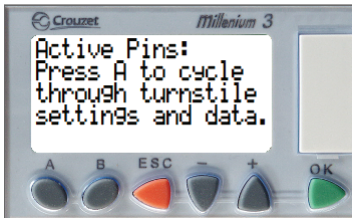

This screen is at the start of the menu cycle. The top section will give a read out of inputs that are currently receiving voltage. The display will return to this screen after cycling through all windows, 5 minutes of inactivity or pressing the B button.

Timer Values Screen

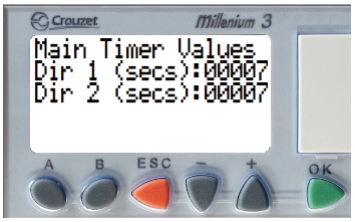

This screen allows for the each directional timer to be modified. Select which value you wish to edit by pressing the + & - key. Press OK to select the value then press + or - to modify. Save by pressing the OK button again. Each timer can have a value of 1 - 60 seconds. The timer will be canceled upon rotation of unit.

One-Shot Timers Screen

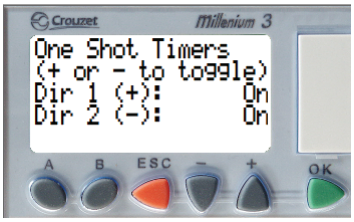

This screen allows for the two one-shot timer settings to be enabled or disabled. This setting prevents access control from holding open a direction on the standard direction inputs. Toggle Direction 1 by pressing + and Direction 2 by pressing -. This should be set to "On" in almost every installation.

Swipe Queue Screen

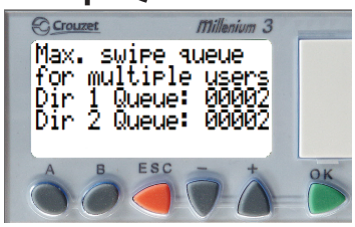

This screen defines the maximum number of access control requests the unit will allow in queue. Each value can be set from between 1 (for maximum security) to 3 (for fast paced passage). The default is 2. The method to change these settings is the same as the Timer Values Screen.

Direction 1 Counts Screen

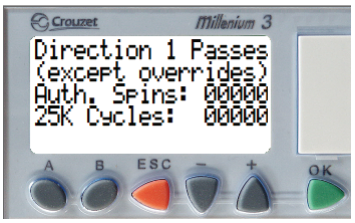

This screen gives statistics about how many times direction 1 was activated and cycled. Since there is a limit to how many counts can be displayed, after 25000 cycles the first counter resets and adds to the second counter.

Direction 2 Counts Screen

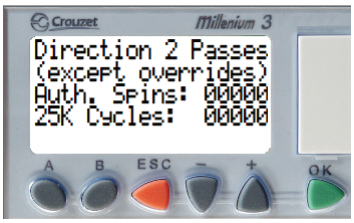

This screen gives statistics about how many times direction 2 was activated and cycled. Since there is a limit to how many counts can be displayed, after 25000 cycles the first counter resets and adds to the second counter.

General Info Screen

This screen displays when the PLC was initiated, the order number it was activated for (except for any revision suffixes which are not needed for order lookup), and the PLC software version.

Testing Mode Screen

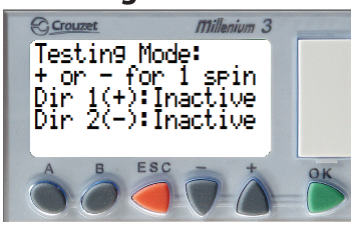

While this screen is active, the unit can be tested with push buttons to simulate access control inputs. See the page dedicated to testing for more information.

Factory Setup Screen

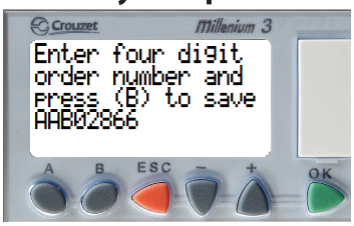

This screen should only appear when first set up in the factory or if something occurs to totally reset the logic controller. If this manages to occur and the order number (if known), enter it as a value then press B to save.

6500 Series Control Head w/ XD10 Controller Standard Turnstile Testing

The XD10 logic controller on the 6500 Series Control Head can be activated by contact closures between 24VDC+ and the relevant input. New technology allows for simpler on-board testing as well. To diagnose issues with the unit, press A on the keypad to cycle between screens until the testing mode screen appears.

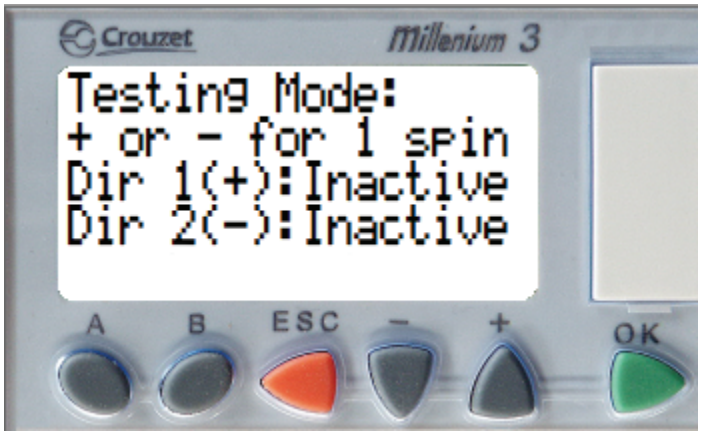

Testing mode simulates valid access control inputs based on the settings defined on the other menu screens. The unit should unlock for the duration of the directional timer or until the unit is rotated. If the button is pressed twice, it should allow two rotations or time out based on the mult-swipe setting. If the button is held and the one shot timers are disabled, the unit will continue to remain open until the button is released and another rotation or timeout occurs.

With the testing mode screen open, press and release + to activate in direction 1. The unit should unlock and allow one rotation. If the unit successfully functions this way, repeat the same for direction 2 by pressing the - button.

If everything is functioning properly from the menu test but not with access control, either access control is not connected properly, is normally closed instead of normally open, or is not properly configured. Contact a security integrator for assistance with help with the access control system.

If the unit successful unlocks but does not re-lock upon rotation, try to manually trigger the appropriate limit switch for the direction that is not working correctly. If this helps, it is likely that the limit switch is not properly being triggered by the limit switch cam. Either adjust the height of the limit switch cam or tweak the lever on the limit switch a bit closer to the limit switch cam's tip.

If the unit does not successfully re-lock after manually triggering the limit switch, ensure that it is wired properly. Return to the home screen and press / hold the limit switch. If the switch is being held but the "Active Pins" display does not include the switch being held, it may be necessary to replace the switch. Note that there is a short delay from when the switch is triggered to when the display will register it as active, however this is normal.

If there are other issues with operation, check out the troubleshooting guide for additional diagnostic procedures or call Controlled Access, Inc. for assistance.

6500 Series Control Head Limit Switch Information

Electronically controlled 6500 Series Control Heads utilize limit switches (or optionally, proximity sensors) in order to detect rotation. Depending on the type of unit (turnstile or ADA gate), the limit switch for a direction may be on the left or the right hand side of the control head.

Turnstile Control Head

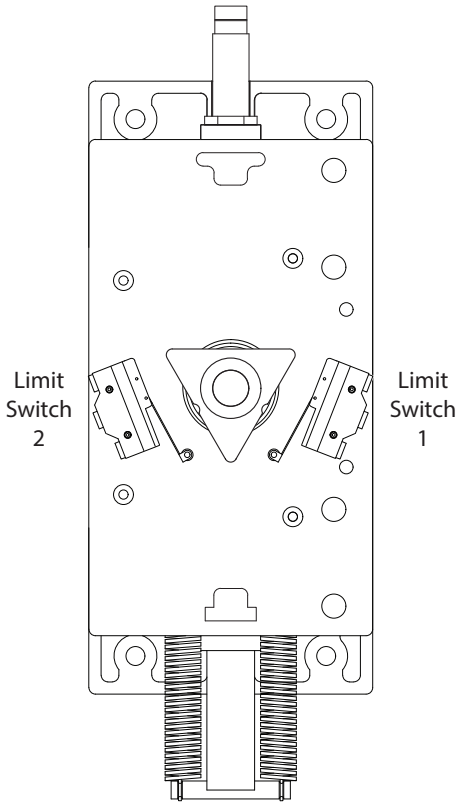

Turnstile control heads use a triangular shaped limit switch cam. One point of the triangle needs to be facing the index pin (bar with two springs) when the cam is in the home position. The two indents in the sides of the triangle are for jigging purposes. It does not matter which point is facing to the springs.

The limit switch for direction 1 is on the right and the limit switch for direction 2 is on the left. In this configuration, the first limit switch triggered does not affect the unit. The second switch triggers after the half-way point of the rotation, which draws in the solenoid. This allows the rotation to go to home but prevents the rotor from backing in the other direction.

ADA Gate Control Head

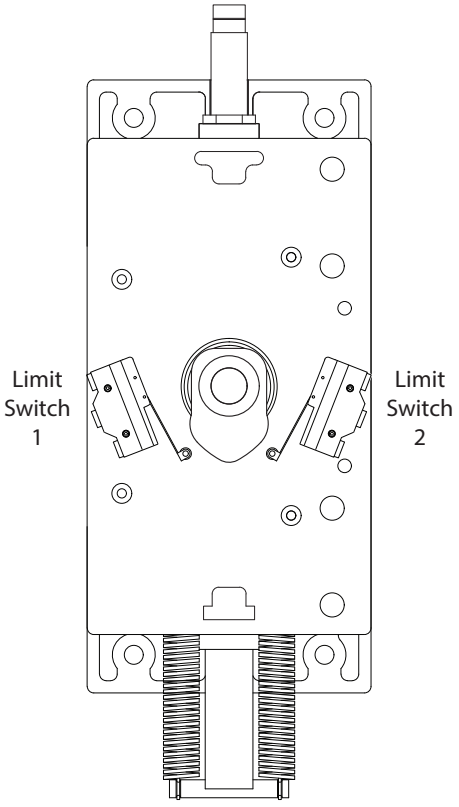

ADA Gate control heads use an oblong lobe shaped limit switch cam. The point of the lobe needs to be facing the index pin (bar with two springs) when the cam is in the home position.

The limit switch for direction 1 is on the left and the limit switch for direction 2 is on the right. In this configuration, the limit switch relevant to the swing is triggered after the cam leaves home position, which re-engages the locking bar. The cam is still free to move until it swings back to the home position.

Options and configurations may alter the quantity or layout of the limit switches. Some examples of this would be electronically controlled one direction turnstiles, turnstiles with counters and turnstiles equipped with home position switches.

Maintenance & Cleaning

To ensure long life on any turnstile, the following maintenance is recommended. Note: these figures are assuming a maximum 75000 passages per year. Turnstiles with heavier traffic should be maintained more frequently.

Annual Servicing

- Secure all nuts & bolts throughout each model. This includes concrete anchors, carriage bolts holding together mainframes, and the bolts holding the control head assembly together.
- Remove the index pin assembly from the control head by disconnecting the two extension springs & apply white lithium grease. Use 3-in-1 oil on the index pin roller.
- If the unit is a High Security series full height turnstile, add grease to the rotor's roller bearing by utilizing the grease fitting fastened into the bottom of the rotor.

Biennial Servicing

- Disassemble the control head by removing the 4x socket head cap screws holding the top casting to the bottom casting (and the triangular limit switch cam if equipped).
- Clean any loose debris / grease from the inside of the casting.
- Inspect internal components for wear and replace as needed.
- Apply 3-in-1 oil to the bronze bushings on the locking bar assemblies and shock piston.
- Apply white lithium grease to the shock piston where it enters the bronze housing.
- Reassemble the control head assembly, using removable strength (typically blue) thread sealer (such as Loctite 243) on the head bolts to ensure the assembly stays together.

Cleaning

- Galvanized surfaces can be cleaned with soap and water. The finish may dull over time, but this is normal.
- Powder coated surfaces should be cleaned with a non-abrasive cleaner such as Formula 409. Inspect finish for chips and touch up as needed or the exposed steel may rust.
- Stainless steel surfaces should be polished with a stainless steel wax or polish. Contrary to common belief, stainless steel is not rust proof. Exposure to certain chemicals and harsh environments such as ocean air or chemical plants may cause surface corrosion. Minor discoloration can be removed with a rust penetrating product (such as PB Blaster) along with non-scratching scouring pads. Severe cases of contamination may require the use of specialty products. We have had great success with products such as Stellar Solutions' Citrisurf 2310 Rust Remover and Passivation Solution.
- The decorative solid surface tops on our Executive models, Beacon models and some PassThru models should be polished with furniture polish (such as Scott's Liquid Gold Wood Cleaner). Allowing the product to soak into the material for a few minutes easily restores the surface's luster.
- Polycarbonate plastic should only be cleaned following the plastic manufacturer's recommendations. **DO NOT USE ANY PRODUCTS THAT INCLUDE AMMONIA OR OTHER HIGH PH PRODUCTS.** If the model purchased includes polycarbonate plastic, see the section of the manual dedicated to cleaning it (starting on the next page). Failure to use appropriate cleaning methods will cause aesthetic and structural damage to the plastic which will not be covered under the warranty.

Control heads can be removed from the turnstile and shipped to the factory at any time for repairs and maintenance. Please include contact information so we can call to discuss any issues your control head may have. Please note that any repairs that cost under $500.00 will require a credit card payment before being returned.

6500 Series Control Head w/ XD10 Controller Troubleshooting

Symptoms	Causes	Solutions
Turnstile does not power up or logic controller's display cycles on and off.	Power supply is not receiving input voltage.	Verify outlet receptacle installed in mainframe / cabinet is operating correctly and that the power supply is plugged in.
	Power supply is not producing 24VDC voltage, but is receiving AC.	Remove + lead from power supply output. If output voltage resumes, there is a short circuit in the wiring. If not, the power supply is faulty. Replace power supply.
	Short circuit in the wiring as determined in previous step.	Refer to pages 13-15 for wiring information.
	Loose wiring from power supply to logic controller.	
	Short circuit in the wiring.	
	Solenoid(s) burnt out (will occur if main AC voltage is connected directly to solenoid).	If wiring is correct, try to disconnect the solenoids from outputs 01 - 04. If system stops cycling, replace faulty solenoid.
	Solenoid tabs grounded out against control head casting after being reassembled from maintenance or reconfiguration.	Disassemble control head casting and flip solenoids so that the tabs with wires are facing away from the center of the control head casting.
Turnstile powers up but does not respond.	Solenoid (-) wire(s) not properly terminated.	Ensure solenoid negative wires are properly terminated to 24VDC- input and that the 3 wire splice (if equipped) is properly crimped.
	Improper wiring from access control to logic controller.	Ensure one leg of access control output relay is connected to 24VDC + and the other to the desired input.
	Access control device malfunction.	Disconnect access control from logic controller. Preform testing procedures on page 16. If the turnstile works properly, contact manufacturer of access control device.

6500 Series Control Head w/ XD10 Controller Troubleshooting

Symptoms	Causes	Solutions
More than one person can get through turnstile.	Access control device output connected to override inputs.	Wire access control to I1 or I2 with one-shot timer enabled.
	Access control device output set too long.	This can be avoided by enabling the one-shot timers built into the logic controller program. If this is undesirable, ensure the output from the access control system is one second or less.
	Loose wiring to the logic controller from limit switches.	Refer to pages 13-15 for wiring information.
	Limit switches are broken.	Inspect limit switches for breakage, replace as needed.
	Control head requires maintenance.	Refer to page 18 for more information.
	Limit switches are missing the triangular top cam.	Adjust the top cam to the proper height and/or tweak the triggers on the limit switch. Refer to page 17 for more information.
People are becoming trapped inside of the turnstile (Full Height models)	Rotor was installed backwards.	Refer to page 4 installation for visual diagram on how to install rotor properly.
Turnstile only rotates 30 degrees.	Limit switches wired incorrectly.	Refer to pages 13-15 for wiring information and page 17 for limit switch placement.
	Limit switch cam is misaligned.	The top cam should have one point facing the control board. If this is not the case, readjust the top cam. Refer to page 17 for top cam information.
Unit remains unlocked until access control is presented.	Fail open / fail lock configuration is wired incorrectly.	Refer to pages 13-15 for wiring information.
Turnstile is slamming into the closed position.	Shock either needs adjusted or replaced.	Refer to page 12 for more information.
Turnstile is not centering properly.	Shock needs adjusted.	
	Binding in control head.	Ensure mainframe is level and the rotor is plumb. Shim the unit from the floor if necessary.
Turnstile seems to be binding mechanically.	Rotor is not plumb / turnstile body is not level.	

6500 Series Control Head w/ XD10 Controller Troubleshooting

Symptoms	Causes	Solutions
Unit remains locked after access control is presented until arm is pulled in.	Mechanical bind between locking bar and cam assembly (typically from unit being out of plumb or not level)	Remove locking bar assembly from control head (easiest way on non-key lock models is to punch out dowel pin pivot point from bottom side of head casting) and file down tip of locking bar to give clearance.
Turnstile rotating the wrong direction.	Improperly filled out direction sheet.	In some cases, the control head can be reconfigured in the field to operate as needed. Refer to pages 9-11 for information about how the control head operates. If needed, contol heads can be returned to the factory for reconfiguration for a fee of labor plus parts (if required). Please contact us before returning a control head in this instance.
	Directional inputs wired incorrectly.	Refer to wiring legend on page 15 for direction port explanations.
Turnstile fails lock when needed to fail open or vice versa.	Improperly filled out direction sheet.	Refer to page 11 for more information. Additional parts will be required to convert operation. The control head can be returned for reconfiguration for a fee of labor plus parts (if required). Please contact us before returning a control head in this instance.
Unable to hold direction open to allow multiple people to pass through the turnstile.	Override wired to incorrect inputs.	Ensure the access control device dedicated to overriding passage is wired to the override input instead of the standard input for that direction.
	One-shot timers are enabled (on regular access control input).	Disable the one-shot timer settings on the logic controller. Be sure that your access control output is one second or less during regular secure operation or extra people may be able to pass through. Refer to pages 18-19.
Other problems.		Please contact us for any other issues.

Proper Turnstile Usage

The 6500 Series Control head is easy to use. There are a few things that users should be trained on and informed of.

- In the case of an electronic turnstile, approach the unit and present access control credentials. Do not push on the arms of the rotor until after the access control device successfully unlocks the turnstile. A sturdy click sound will be heard from the main channel when the solenoid pulls the locking bar open.

- Note that the turnstile will not unlock if the rotor or arm is being pushed on before access control activates the solenoid. The unit should unlock once pressure is released but it is a better practice to wait until the unit is unlocked before pushing on the rotor.

- Once access has been granted, proceed through the turnstile immediately. Waiting too long could cause the rotor to time out mid-rotation, forcing the user to back out of the turnstile. There are timer settings for adjusting how long it takes for this to occur. The default time provided is 7 seconds. The reason for this is in case somebody swipes and walks away without passing through.

- Walk at a reasonable pace through the turnstile. Do not slam the rotor through the rotation. This can be unsafe and may cause unnecessary wear and tear to the control head.

- Try to be respectful of users wanting to pass through the opposite direction. Allow people who are waiting an opportunity to pass through the turnstile.

- Avoid rotation the rotor of a full height without being in the passage. This will cause the rotor to re-lock before you have a chance to pass through the turnstile.

- Piggybacking : More than one user trying to squeeze through the turnstile on one rotation should be avoided. Large bags and carts should be brought through an alternate means of entrance.

Warranty Information

CONTROLLED ACCESS, INC.
Turnstiles and ADA Gates

Seller warrants the goods against defective workmanship and materials provided that Buyer notify Seller within one (1) year after receipt by Buyer of the goods of any claim under this Warranty. The liability of Seller shall be limited to replacing or repairing defective goods returned by Buyer and delivered to the factory of the Seller, transportation charges prepaid.

Replaced or repaired goods will be redelivered freight prepaid to the address of Buyer shown hereon. Except for the Warranty contained herein, there shall be no other warranties, such as warranties of fitness and merchantability or otherwise express or implied, written or verbal, and Seller shall not be liable for consequential damages in any event.